SECTION RF
ROOF

CONTENTS

PRECAUTIONS 2
Precautions for Supplemental Restraint System (SRS) “AIR BAG” and “SEAT BELT PRE-TENSIONER” 2
Precautions 2
PREPARATION 3
Special Service Tools 3
Commercial Service Tools 3
SQUEAK AND RATTLE TROUBLE DIAGNOSES 4
Work Flow 4
CUSTOMER INTERVIEW 4
DUPLICATE THE NOISE AND TEST DRIVE 5
CHECK RELATED SERVICE BULLETINS 5
LOCATE THE NOISE AND IDENTIFY THE ROOT CAUSE 5
REPAIR THE CAUSE 5
CONFIRM THE REPAIR 6
Generic Squeak and Rattle Troubleshooting 6
INSTRUMENT PANEL 6
CENTER CONSOLE 6
DOORS 6
TRUNK 7
SUNROOF/HEADLINING 7
SEATS 7
UNDERHOOD 7
Diagnostic Worksheet 8
SUNROOF 10
System Description 10
RESUMING OPERATION 10
Component Parts Location 10
Wiring Diagram — SROOF — 11
Terminal and Reference Value for Sunroof Switch 13
Wind Deflector Inspection 13
Glass Lid Weatherstrip Inspection 13
Link and Wire Assembly Inspection 13
Fitting Adjustment 14
LONGITUDINAL/LATERAL CLEARANCE ADJUSTMENT 14
SURFACE MISMATCH ADJUSTMENT 14
Removal and Installation 15
SUNROOF UNIT 16
GLASS LID 17
SUNSHADE 17
WIND DEFLECTOR 18
SUNROOF MOTOR 18

PRECAUTIONS

PFP:00001

Precautions for Supplemental Restraint System (SRS) “AIR BAG” and “SEAT BELT PRE-TENSIONER”

AIS005RK

The Supplemental Restraint System such as “AIR BAG” and “SEAT BELT PRE-TENSIONER”, used along with a front seat belt, helps to reduce the risk or severity of injury to the driver and front passenger for certain types of collision. Information necessary to service the system safely is included in the SRS and SB section of this Service Manual.

WARNING:

- **To avoid rendering the SRS inoperative, which could increase the risk of personal injury or death in the event of a collision which would result in air bag inflation, all maintenance must be performed by an authorized NISSAN/INFINITI dealer.**
- **Improper maintenance, including incorrect removal and installation of the SRS, can lead to personal injury caused by unintentional activation of the system. For removal of Spiral Cable and Air Bag Module, see the SRS section.**
- **Do not use electrical test equipment on any circuit related to the SRS unless instructed to in this Service Manual. SRS wiring harnesses can be identified by yellow and/or orange harnesses or harness connectors.**

Precautions

AIS005RL

- When removing or disassembling any part, be careful not to damage or deform it. Protect parts, which may get in the way with cloth.
- When removing parts with a screwdriver or other tool, protect parts by wrapping them with vinyl or tape.
- Keep removed parts protected with cloth.
- If a clip is deformed or damaged, replace it.
- If an unreusable part is removed, replace it with a new one.
- Tighten bolts and nuts firmly to the specified torque.
- After re-assembly has been completed, make sure each part functions correctly.
- Remove stains in the following way.

Water-soluble stains:
Dip a soft cloth in warm water, and then squeeze it tightly. After wiping the stain, wipe with a soft dry cloth.
Oil stain:
Dissolve a synthetic detergent in warm water (density of 2 to 3% or less), dip the cloth, then clean off the stain with the cloth. Next, dip the cloth in fresh water and squeeze it tightly. Then clean off the detergent completely. Then wipe the area with a soft dry cloth.

- Do not use any organic solvent, such as thinner or benzine.
- If sunroof motor operation sound is noted but sunroof does not operate, replace motor assembly with glass lid fully closed.
- If sunroof (glass lid and motor) does not operate when using sunroof switch then remove the front cover of the luggage compartment, and rotate motor gear box drive shaft with the emergency handle (in the tool box).

PREPARATION

PFP:00002

Special Service Tools

AIS00662

The actual shapes of Kent-Moore tools may differ from those of special service tools illustrated here.

Tool number (Kent-Moore No.) Tool name		Description
(J-39570) Chassis ear	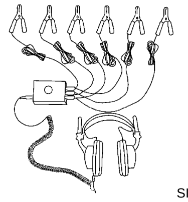 SIIA0993E	Locating the noise
(J-43980) NISSAN Squeak and Rattle Kit	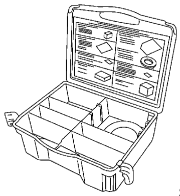 SIIA0994E	Repairing the cause of noise

Commercial Service Tools

AIS005RM

Tool name		Description
Engine ear	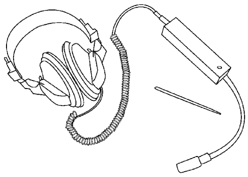 SIIA0995E	Locating the noise

SQUEAK AND RATTLE TROUBLE DIAGNOSES

PFP:00000

Work Flow

AIS00614

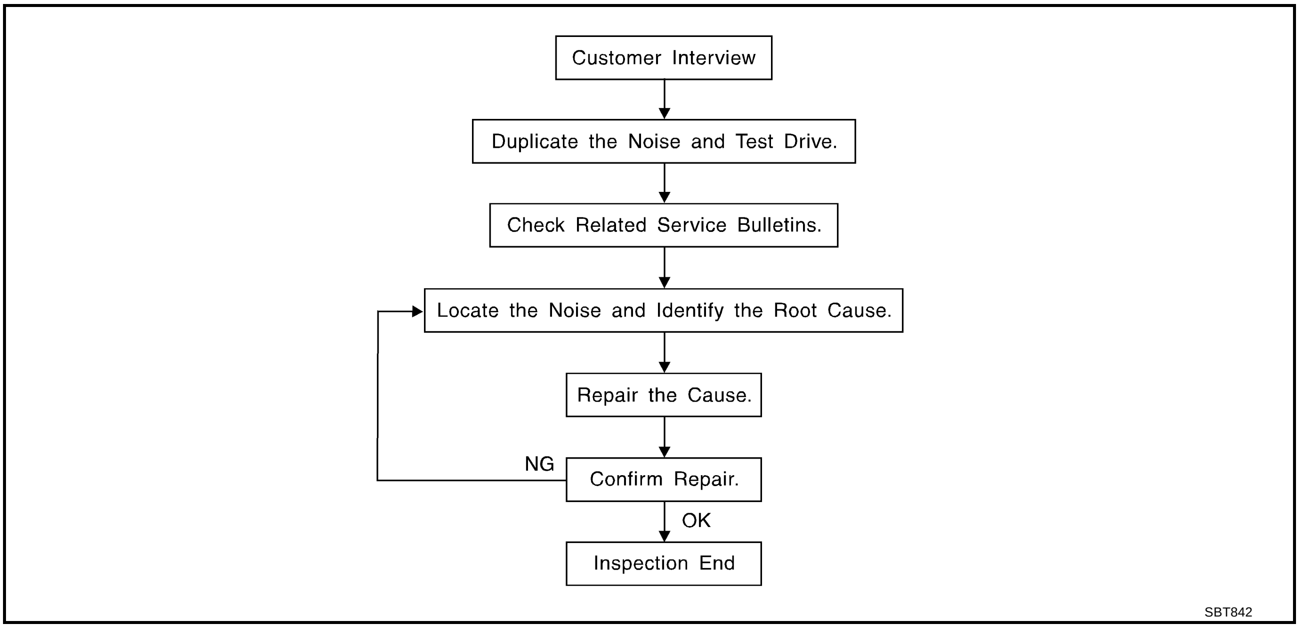

CUSTOMER INTERVIEW

Interview the customer if possible, to determine the conditions that exist when the noise occurs. Use the Diagnostic Worksheet during the interview to document the facts and conditions when the noise occurs and any customer's comments; refer to RF-8, "Diagnostic Worksheet" . This information is necessary to duplicate the conditions that exist when the noise occurs.

- The customer may not be able to provide a detailed description or the location of the noise. Attempt to obtain all the facts and conditions that exist when the noise occurs (or does not occur).
- If there is more than one noise in the vehicle, be sure to diagnose and repair the noise that the customer is concerned about. This can be accomplished by test driving the vehicle with the customer.
- After identifying the type of noise, isolate the noise in terms of its characteristics. The noise characteristics are provided so the customer, service adviser and technician are all speaking the same language when defining the noise.
- Squeak —(Like tennis shoes on a clean floor)
  Squeak characteristics include the light contact/fast movement/brought on by road conditions/hard surfaces=higher pitch noise/softer surfaces=lower pitch noises/edge to surface=chirping
- Creak—(Like walking on an old wooden floor)
  Creak characteristics include firm contact/slow movement/twisting with a rotational movement/pitch dependent on materials/often brought on by activity.
- Rattle—(Like shaking a baby rattle)
  Rattle characteristics include the fast repeated contact/vibration or similar movement/loose parts/missing clip or fastener/incorrect clearance.
- Knock —(Like a knock on a door)
  Knock characteristics include hollow sounding/sometimes repeating/often brought on by driver action.
- Tick—(Like a clock second hand)
  Tick characteristics include gentle contacting of light materials/loose components/can be caused by driver action or road conditions.
- Thump—(Heavy, muffled knock noise)
  Thump characteristics include softer knock/dead sound often brought on by activity.
- Buzz—(Like a bumble bee)
  Buzz characteristics include high frequency rattle/firm contact.
- Often the degree of acceptable noise level will vary depending upon the person. A noise that you may judge as acceptable may be very irritating to the customer.
- Weather conditions, especially humidity and temperature, may have a great effect on noise level.

DUPLICATE THE NOISE AND TEST DRIVE

If possible, drive the vehicle with the customer until the noise is duplicated. Note any additional information on the Diagnostic Worksheet regarding the conditions or location of the noise. This information can be used to duplicate the same conditions when you confirm the repair.

If the noise can be duplicated easily during the test drive, to help identify the source of the noise, try to duplicate the noise with the vehicle stopped by doing one or all of the following:

1) Close a door.
2) Tap or push/pull around the area where the noise appears to be coming from.
3) Rev the engine.
4) Use a floor jack to recreate vehicle “twist”.
5) At idle, apply engine load (electrical load, half-clutch on M/T models, drive position on A/T models).
6) Raise the vehicle on a hoist and hit a tire with a rubber hammer.

- Drive the vehicle and attempt to duplicate the conditions the customer states exist when the noise occurs.
- If it is difficult to duplicate the noise, drive the vehicle slowly on an undulating or rough road to stress the vehicle body.

CHECK RELATED SERVICE BULLETINS

After verifying the customer concern or symptom, check ASIST for Technical Service Bulletins (TSBs) related to that concern or symptom.

If a TSB relates to the symptom, follow the procedure to repair the noise.

LOCATE THE NOISE AND IDENTIFY THE ROOT CAUSE

1. Narrow down the noise to a general area. To help pinpoint the source of the noise, use a listening tool (Chassis Ear: J-39570, Engine Ear and mechanics stethoscope).
2. Narrow down the noise to a more specific area and identify the cause of the noise by:

- removing the components in the area that you suspect the noise is coming from.
  Do not use too much force when removing clips and fasteners, otherwise clips and fastener can be broken or lost during the repair, resulting in the creation of new noise.
- tapping or pushing/pulling the component that you suspect is causing the noise.
  Do not tap or push/pull the component with excessive force, otherwise the noise will be eliminated only temporarily.
- feeling for a vibration with your hand by touching the component(s) that you suspect is (are) causing the noise.
- placing a piece of paper between components that you suspect are causing the noise.
- looking for loose components and contact marks.
  Refer to RF-6, "Generic Squeak and Rattle Troubleshooting" .

REPAIR THE CAUSE

- If the cause is a loose component, tighten the component securely.
- If the cause is insufficient clearance between components:
  - separate components by repositioning or loosening and retightening the component, if possible.
  - insulate components with a suitable insulator such as urethane pads, foam blocks, felt cloth tape or urethane tape. A Nissan Squeak and Rattle Kit (J-43980) is available through your authorized Nissan Parts Department.

CAUTION:

Do not use excessive force as many components are constructed of plastic and may be damaged.

NOTE:

Always check with the Parts Department for the latest parts information.

The following materials are contained in the Nissan Squeak and Rattle Kit (J-43980). Each item can be ordered separately as needed.

URETHANE PADS [1.5 mm (0.059 in) thick]

Insulates connectors, harness, etc.

76268-9E005: 100 × 135 mm (3.94 × 5.31 in)/76884-71L01: 60 × 85 mm (2.36 × 3.35 in)/76884-71L02: 15 × 25 mm (0.59 × 0.98 in)

INSULATOR (Foam blocks)

Insulates components from contact. Can be used to fill space behind a panel.

73982-9E000: 45 mm (1.77 in) thick, 50 × 50 mm (1.97 × 1.97 in)/73982-50Y00: 10 mm (0.39 in) thick, 50 × 50 mm (1.97 × 1.97 in)

INSULATOR (Light foam block)
80845-71L00: 30 mm (1.18 in) thick, 30 × 50 mm (1.18 × 1.97 in)
FELT CLOTHTAPE
Used to insulate where movement does not occur. Ideal for instrument panel applications.
68370-4B000: 15 × 25 mm (0.59 × 0.98 in) pad/68239-13E00: 5 mm (0.20 in) wide tape roll
The following materials, not found in the kit, can also be used to repair squeaks and rattles.
UHMW (TEFLON) TAPE
Insulates where slight movement is present. Ideal for instrument panel applications.
SILICONE GREASE
Used in place of UHMW tape that will be visible or not fit. Will only last a few months.
SILICONE SPRAY
Use when grease cannot be applied.
DUCT TAPE
Use to eliminate movement.

CONFIRM THE REPAIR

Confirm that the cause of a noise is repaired by test driving the vehicle. Operate the vehicle under the same conditions as when the noise originally occurred. Refer to the notes on the Diagnostic Worksheet.

Generic Squeak and Rattle Troubleshooting

AIS00615

Refer to Table of Contents for specific component removal and installation information.

INSTRUMENT PANEL

Most incidents are caused by contact and movement between:

1. The cluster lid A and instrument panel
2. Acrylic lens and combination meter housing
3. Instrument panel to front pillar garnish
4. Instrument panel to windshield
5. Instrument panel mounting pins
6. Wiring harnesses behind the combination meter
7. A/C defroster duct and duct joint

These incidents can usually be located by tapping or moving the components to duplicate the noise or by pressing on the components while driving to stop the noise. Most of these incidents can be repaired by applying felt cloth tape or silicon spray (in hard to reach areas). Urethane pads can be used to insulate wiring harness.

CAUTION:
Do not use silicone spray to isolate a squeak or rattle. If you saturate the area with silicone, you will not be able to recheck the repair.

CENTER CONSOLE

Components to pay attention to include:

1. Shifter assembly cover to finisher
2. A/C control unit and cluster lid C
3. Wiring harnesses behind audio and A/C control unit

The instrument panel repair and isolation procedures also apply to the center console.

DOORS

Pay attention to the:

1. Finisher and inner panel making a slapping noise
2. Inside handle escutcheon to door finisher
3. Wiring harnesses tapping
4. Door striker out of alignment causing a popping noise on starts and stops

Tapping or moving the components or pressing on them while driving to duplicate the conditions can isolate many of these incidents. You can usually insulate the areas with felt cloth tape or insulator foam blocks from the Nissan Squeak and Rattle Kit (J-43980) to repair the noise.

TRUNK

Trunk noises are often caused by a loose jack or loose items put into the trunk by the owner.
In addition look for:

1. Trunk lid dumpers out of adjustment
2. Trunk lid striker out of adjustment
3. The trunk lid torsion bars knocking together
4. A loose license plate or bracket

Most of these incidents can be repaired by adjusting, securing or insulating the item(s) or component(s) causing the noise.

SUNROOF/HEADLINING

Noises in the sunroof/headlining area can often be traced to one of the following:

1. Sunroof lid, rail, linkage or seals making a rattle or light knocking noise
2. Sunvisor shaft shaking in the holder
3. Front or rear windshield touching headlining and squeaking

Again, pressing on the components to stop the noise while duplicating the conditions can isolate most of these incidents. Repairs usually consist of insulating with felt cloth tape.

SEATS

When isolating seat noise it's important to note the position the seat is in and the load placed on the seat when the noise is present. These conditions should be duplicated when verifying and isolating the cause of the noise.
Cause of seat noise include:

1. Headrest rods and holder
2. A squeak between the seat pad cushion and frame
3. The rear seatback lock and bracket

These noises can be isolated by moving or pressing on the suspected components while duplicating the conditions under which the noise occurs. Most of these incidents can be repaired by repositioning the component or applying urethane tape to the contact area.

UNDERHOOD

Some interior noise may be caused by components under the hood or on the engine wall. The noise is then transmitted into the passenger compartment.
Causes of transmitted underhood noise include:

1. Any component mounted to the engine wall
2. Components that pass through the engine wall
3. Engine wall mounts and connectors
4. Loose radiator mounting pins
5. Hood bumpers out of adjustment
6. Hood striker out of adjustment

These noises can be difficult to isolate since they cannot be reached from the interior of the vehicle. The best method is to secure, move or insulate one component at a time and test drive the vehicle. Also, engine RPM or load can be changed to isolate the noise. Repairs can usually be made by moving, adjusting, securing, or insulating the component causing the noise.

Diagnostic Worksheet

AIS00616

SQUEAK & RATTLE DIAGNOSTIC WORKSHEET

Dear Nissan Customer:
We are concerned about your satisfaction with your Nissan vehicle. Repairing a squeak or rattle sometimes can be very difficult. To help us fix your Nissan right the first time, please take a moment to note the area of the vehicle where the squeak or rattle occurs and under what conditions. You may be asked to take a test drive with a service advisor or technician to ensure we confirm the noise you are hearing.

I. WHERE DOES THE NOISE COME FROM? (circle the area of the vehicle)
The illustrations are for reference only, and may not reflect the actual configuration of your vehicle.

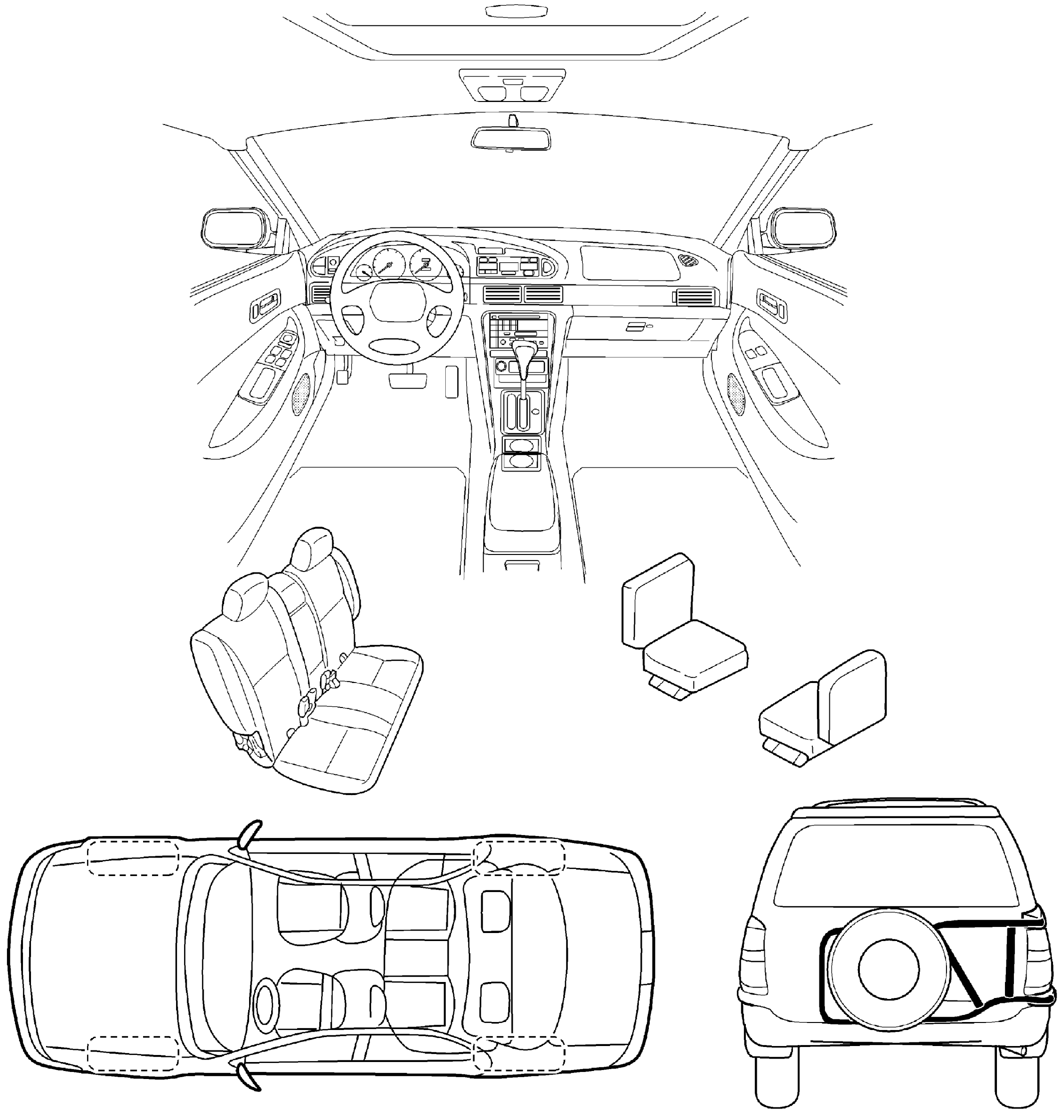

Continue to the back of the worksheet and briefly describe the location of the noise or rattle. In addition, please indicate the conditions which are present when the noise occurs.

PIIB0723E

A B C D E F G H RF J K L M

SQUEAK & RATTLE DIAGNOSTIC WORKSHEET- page 2

Briefly describe the location where the noise occurs:

____

____

II. WHEN DOES IT OCCUR? (check the boxes that apply)

- ❏ anytime
- ❏ 1st time in the morning
- ❏ only when it is cold outside
- ❏ only when it is hot outside
- ❏ after sitting out in the sun
- ❏ when it is raining or wet
- ❏ dry or dusty conditions
- ❏ other: ____________________

III. WHEN DRIVING:

- ❏ through driveways
- ❏ over rough roads
- ❏ over speed bumps
- ❏ only at about ____ mph
- ❏ on acceleration
- ❏ coming to a stop
- ❏ on turns : left, right or either (circle)
- ❏ with passengers or cargo
- ❏ other: ________________
- ❏ after driving ____ miles or ____ minutes

IV. WHAT TYPE OF NOISE?

- ❏ squeak (like tennis shoes on a clean floor)
- ❏ creak (like walking on an old wooden floor)
- ❏ rattle (like shaking a baby rattle)
- ❏ knock (like a knock on a door)
- ❏ tick (like a clock second hand)
- ❏ thump (heavy, muffled knock noise)
- ❏ buzz (like a bumble bee)

TO BE COMPLETED BY DEALERSHIP PERSONNEL
Test Drive Notes:

____

____

	YES	NO	Initials of person performing
Vehicle test driven with customer	❏	❏	______
- Noise verified on test drive	❏	❏	
- Noise source located and repaired	❏	❏	______
- Follow up test drive performed to confirm repair	❏	❏	______

VIN: ________________ Customer Name: ____________________

W.O. #: ______________ Date: ________

This form must be attached to Work Order

SBT844

SUNROOF

PFP:91210

System Description

AIS005RQ

- Operating sunroof switch allows glass lid slide OPEN/CLOSE, and tilt UP/DOWN.
- When sunroof slide switch is pressed firmly toward the OPEN side, glass lid automatically opens and automatic operation is stopped at a point 180 mm (7.09 in)to the fully open position.

  NOTE:
  After the emergency handle is used to rotate the motor drive shaft, sunroof switch operation may not correspond to actual glass lid movement. When this happens, conduct resuming operation to restore normal operation.

RESUMING OPERATION

If actual glass lid operation does not correspond to expected operation, operate sunroof switch to slide glass lid toward area A in the figure. This should result in resumption of normal operation.

CAUTION:
Before normal operation is resumed, expected sunroof switch operation and actual glass lid movement may not correspond. Make sure that neither head nor hands protrude from sunroof and conduct resuming operation.

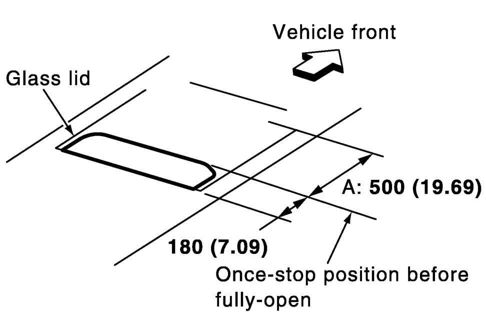

SIIA0139E

Component Parts Location

AIS005RR

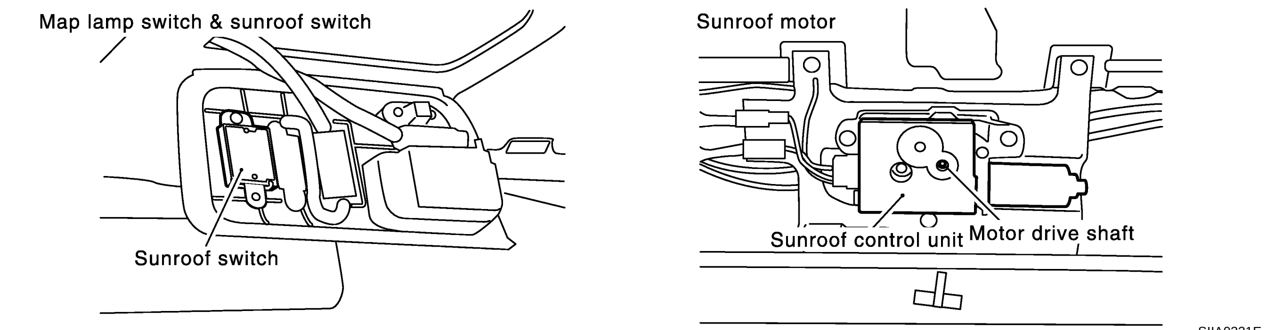

SIIA0321E

Wiring Diagram — SROOF —

AIS005RS

RF-SROOF-01

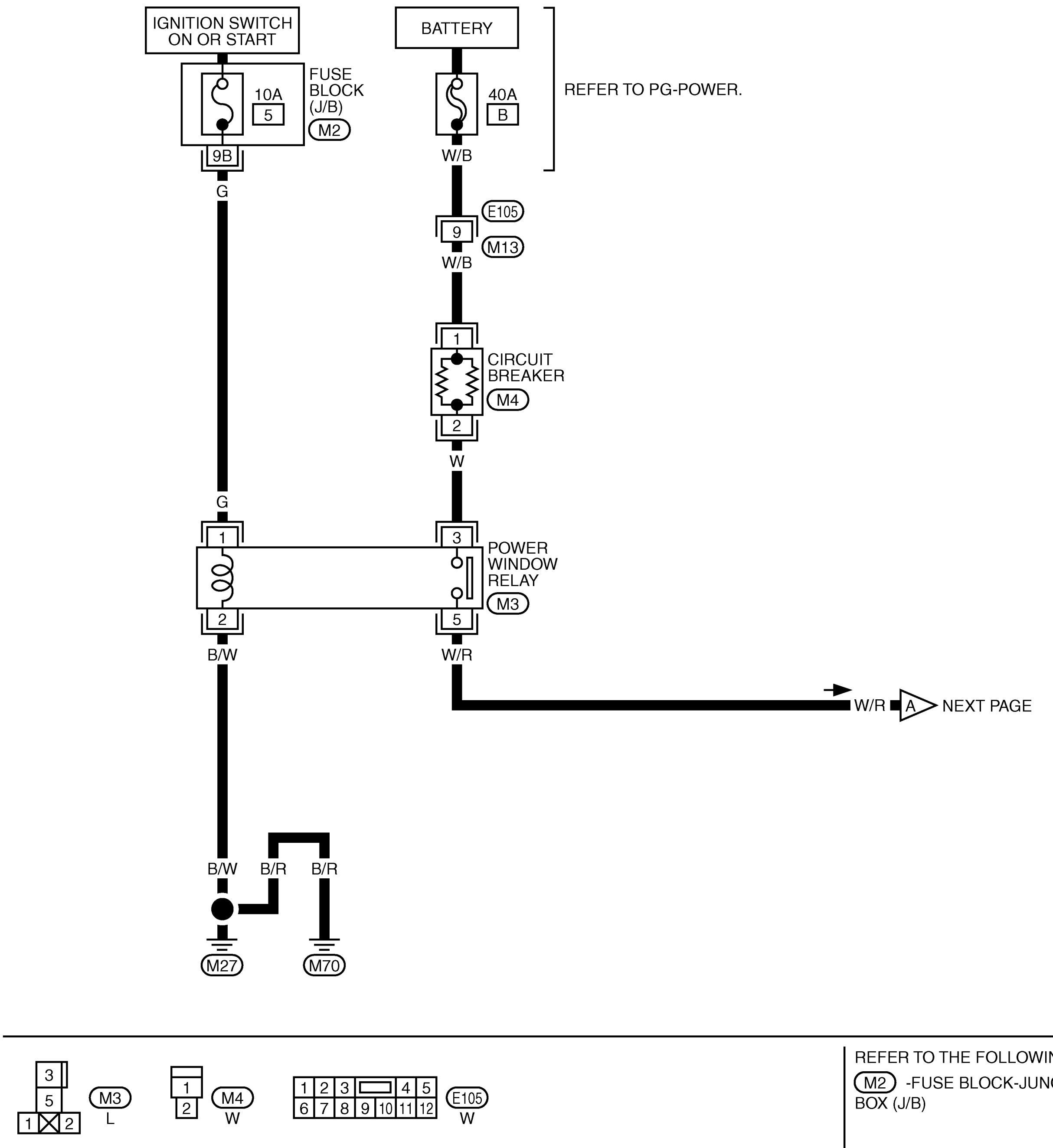

REFER TO THE FOLLOWING.
(M2) -FUSE BLOCK-JUNCTION BOX (J/B)

TIWB0068E

A B C D E F G H RF J K L M

RF-SROOF-02

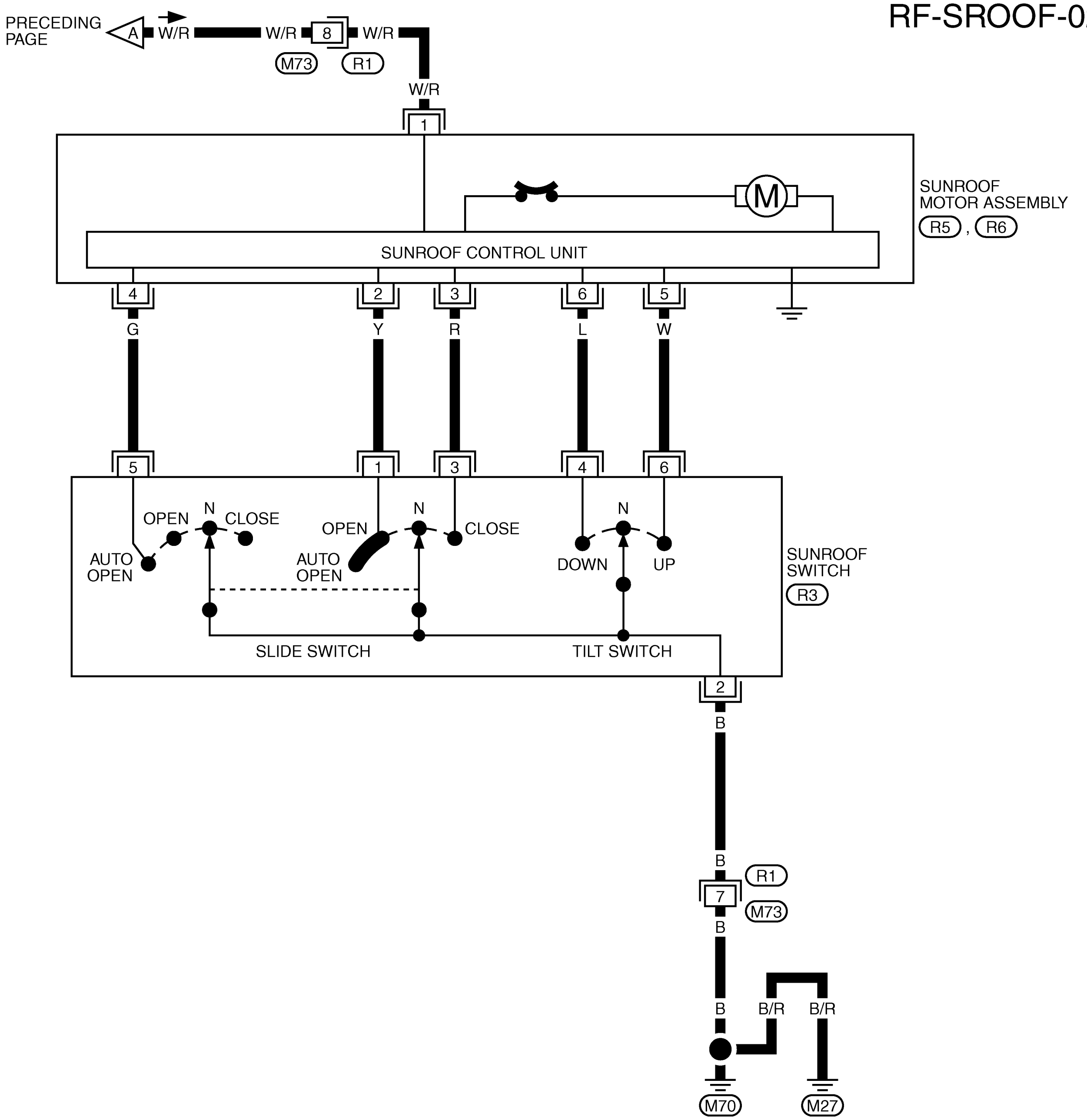

TIWA0484E

Terminal and Reference Value for Sunroof Switch

AIS005RT

TERMI-NAL	WIRE COLOR	ITEM	CONDITION	VOLTAGE (V) (Approx)
1	Y	Sunroof OPEN signal	Sunroof switch OPEN operation	Battery voltage
2	B	Ground	—	0
3	R	Sunroof CLOSE signal	Sunroof switch CLOSE operation	Battery voltage
4	L	Sunroof TILT DOWN signal	Sunroof switch TILT DOWN operation	Battery voltage
5	G	Sunroof AUTO OPEN signal	Sunroof switch AUTO OPEN operation	Battery voltage
6	W	Sunroof TILT UP signal	Sunroof switch TILT UP operation	Battery voltage

Wind Deflector Inspection

AIS005RU

1. Open glass lid.
2. Visually confirm that the mounting condition is correct.
3. Confirm wind deflector connection is properly greased. If necessary, apply body grease.

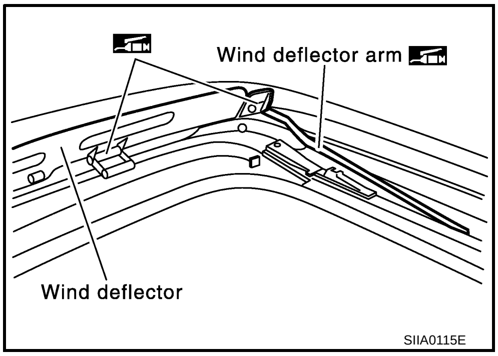

SIIA0115E

4. Confirm wind deflector can be properly raised by hand. If excess wear or damage is detected, remove and visually check it. If it is damaged, replace it with a new one. If no damage is found, reinstall it properly.

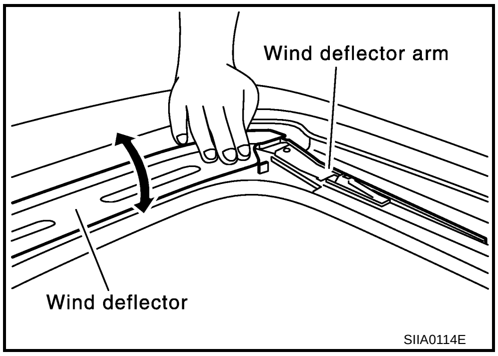

SIIA0114E

Glass Lid Weatherstrip Inspection

AIS005RV

If there is water leakage around glass lid, close glass lid and flush with water to determine whether it is from damaged parts or a gap.

1. Remove glass lid.
2. Visually check weatherstrip for damage, deterioration, or deformation. If excess wear or damage is detected, replace glass lid.

Link and Wire Assembly Inspection

AIS005RW

1. If the link coating peels off to show the base material and an abnormal noise is heard, replace it.
2. Visually confirm the wire and rail groove are properly greased. If necessary, apply body grease.

Fitting Adjustment

AIS005RX

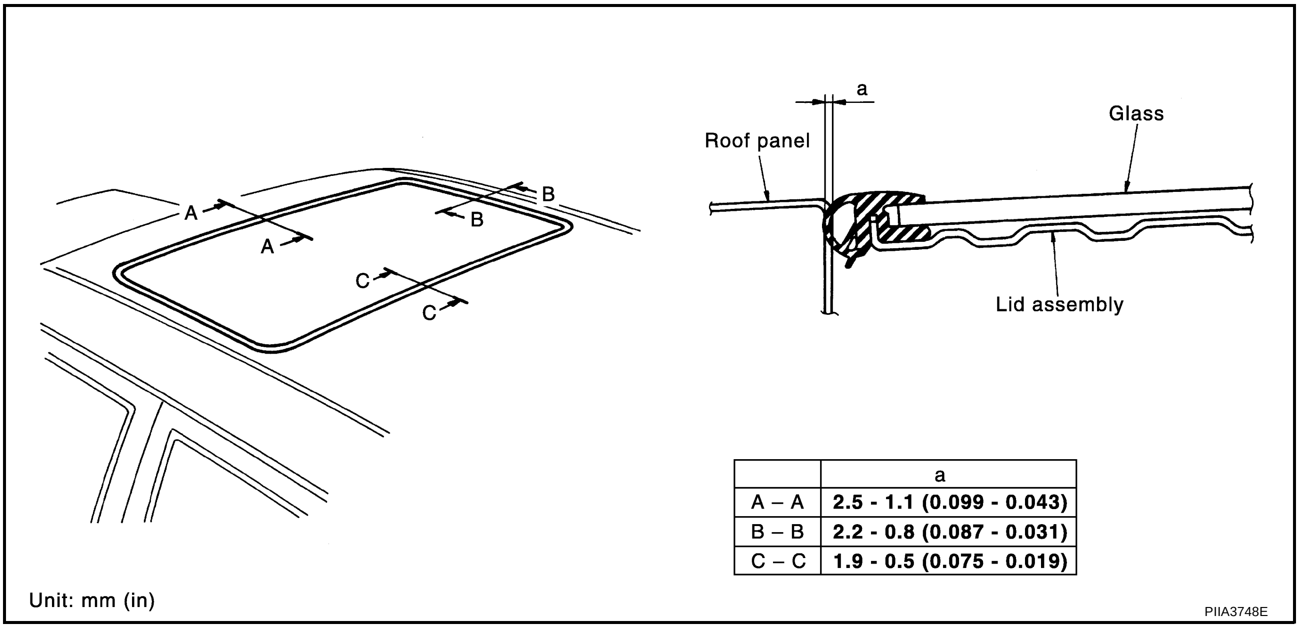

	a
A – A	2.5 - 1.1 (0.099 - 0.043)
B – B	2.2 - 0.8 (0.087 - 0.031)
C – C	1.9 - 0.5 (0.075 - 0.019)

LONGITUDINAL/LATERAL CLEARANCE ADJUSTMENT

1. Tilt up glass lid and then remove side trim.
2. After loosening glass lid mounting nuts, tilt down glass lid.
3. Adjust glass lid according to sections A–A, B–B, C–C as shown in the figure.
4. After adjusting glass lid, tighten nuts to the specified torque.
5. Tilt glass lid 4 to 5 times to check that it smoothly goes up and down.

SURFACE MISMATCH ADJUSTMENT

1. Adjust surface height of glass lid and roof panel to 0 ± 1.5 mm (0 ± 0.059 in) by altering the number of shims between glass lid and link assembly. (Standard: 2, max: 4)
2. After fitting adjustment, use a hose to flush the entire surface of the roof with water to check for leaks.

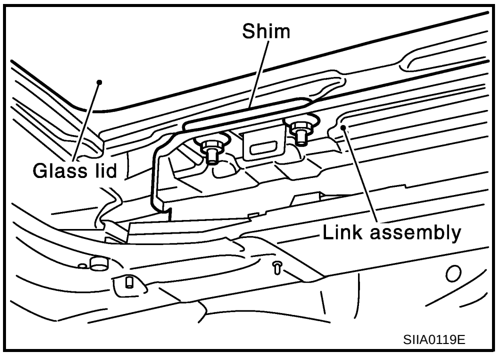

Removal and Installation

AIS005RY

SEC. 736

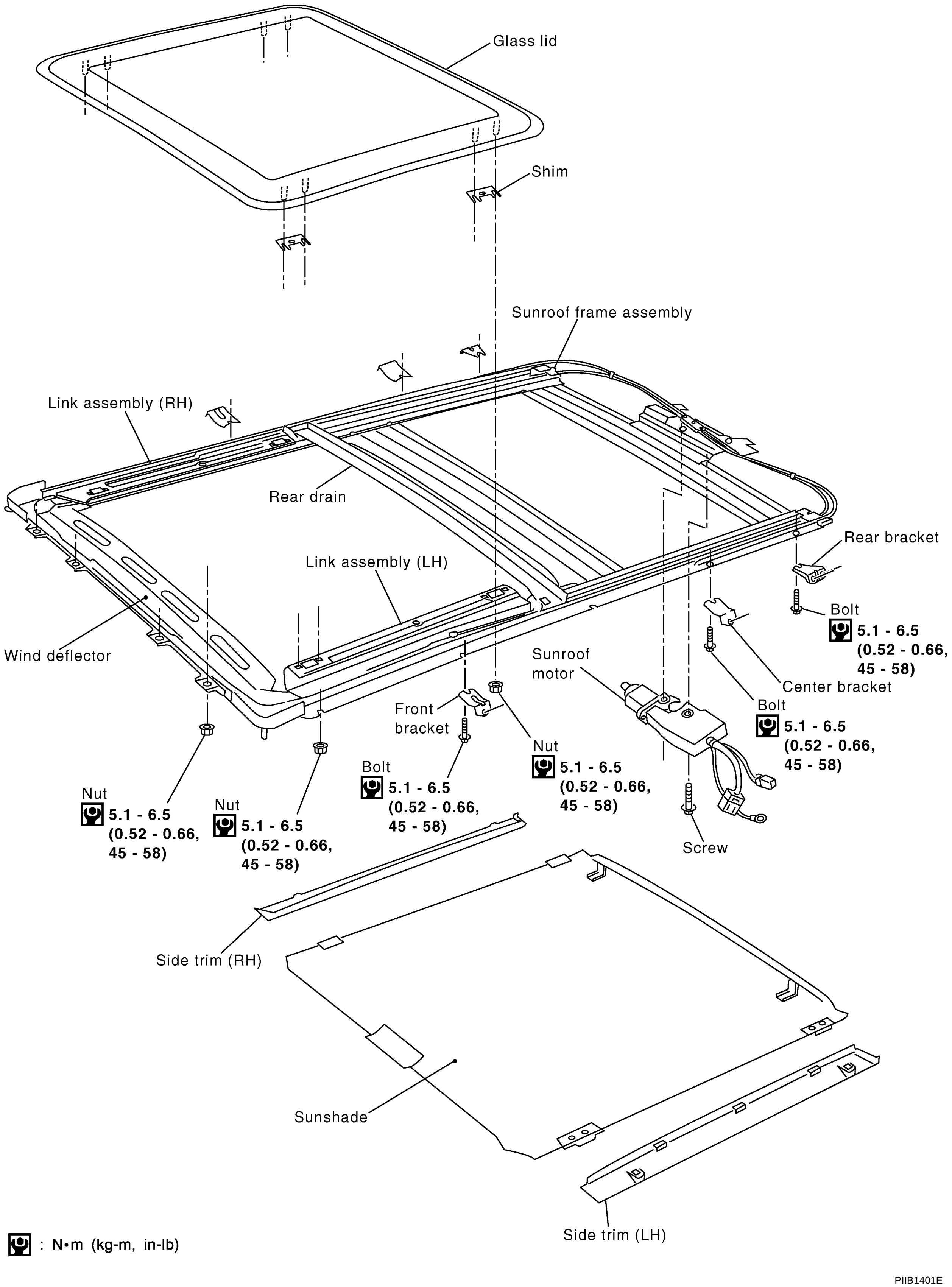

PIIB1401E

A B C D E F G H RF J K L M

SUNROOF UNIT

Removal

CAUTION:

- **Removal and installation of sunroof unit require 2 workers.**
- **When taking sunroof unit out, use shop cloths to protect seats and trim from damage.**
- **After installing sunroof unit and glass lid, be sure to carry out the leak test to confirm there is no more leakage.**

1. Remove headlining. Refer to EI-40, "HEADLINING"
2. Disconnect drain hoses.
3. Disconnect interior lamp harness.
4. Remove both sunroof unit-side and body-side front bracket mounting bolts.

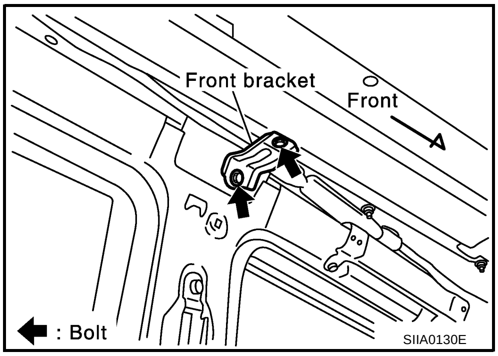

5. Remove both sunroof unit-side and body-side center and rear bracket mounting bolts.

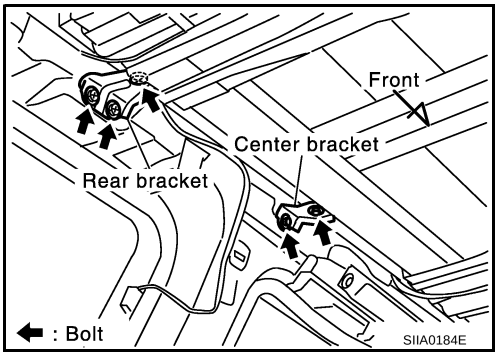

6. Disconnect connector from sunroof motor and then remove sunroof motor bracket mounting bolts.

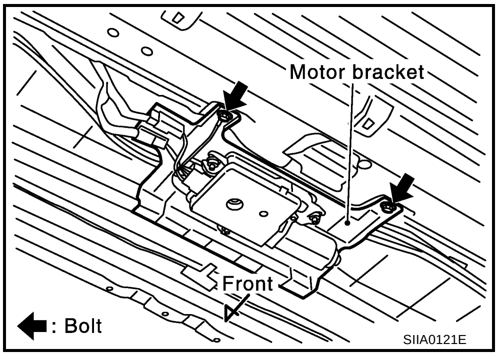

7. Remove mounting nuts from the front end and side rails, then remove sunroof unit from the roof panel.
8. Take out the sunroof unit from the passenger compartment while being careful not to damage the seats and trim.

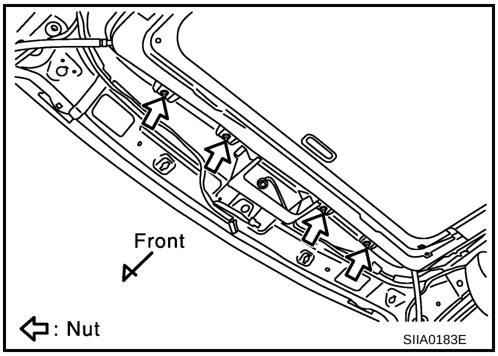

Installation

1. After bringing sunroof unit into the passenger compartment, tighten mounting nuts on the side rails start from the one at the front reference point.
2. Tighten mounting nuts of the front end.

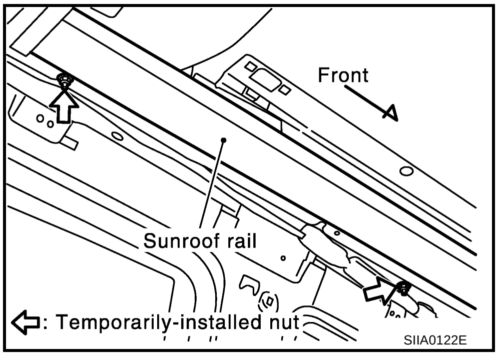

3. Align the front bracket to lower face of the rail and roof side mounting face. Tighten bolts of the sunroof unit side and then tighten bolts of the body side.
4. Align the center and rear brackets to lower face of the rail and roof side mounting face. Tighten bolts of the sunroof unit side and then tighten bolts of the body side.

   NOTE:
   Install the sunroof bracket evenly so that the roof surface has no distortion.
5. Tighten bolts of sunroof motor bracket.
6. Connect the sunroof motor harness connector.
7. Connect the interior lamp harness connector.

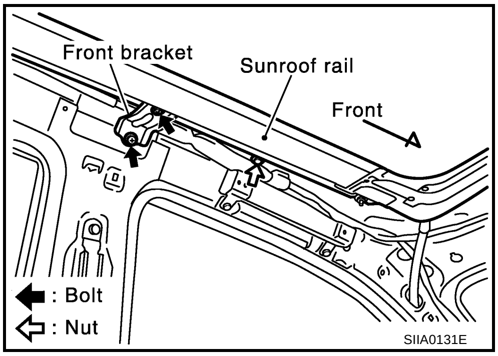

GLASS LID

Removal

1. Tilt up glass lid.
2. Remove side trim.
3. Confirm the number of shims between glass lid and link.

   NOTE:
   Number of shims. Standard: 2, max: 4.
4. Remove mounting nut and then remove glass lid.

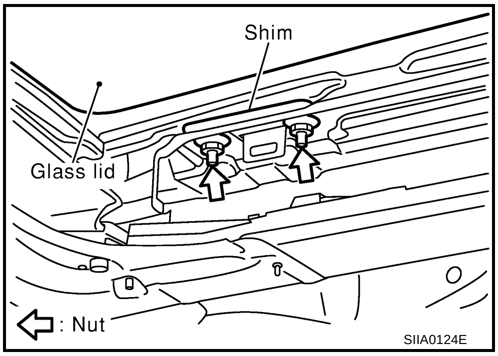

Installation

Install in the reverse order of removal.

NOTE:

- Tighten nuts on glass lid diagonally.
- After installation, adjust the fit.

SUNSHADE

Removal

1. Remove glass lid.
2. Remove rear drain.
3. Move link assembly to the fully open position.
4. Loosen the mounting screws of the front LH shade slide.

5. As shown in the figure, slide sunshade and then remove it from the aluminum rail.
6. Swivel sunshade toward the left, then remove RH sunshade from the aluminum rail.
7. Slide sunshade forward, then remove rear sunshade sliders as well.

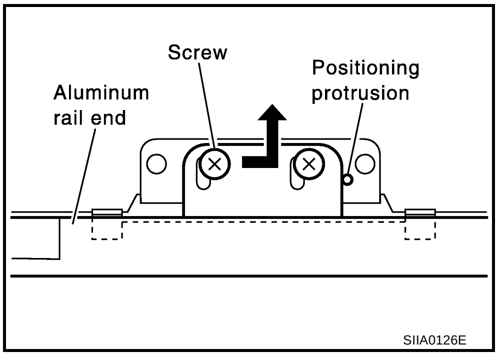

Installation

Install in the reverse order of removal.

WIND DEFLECTOR

Removal

1. Remove deflector arm mounting screws.
2. Using a pointed tool, pull up the tabs on the bushing.
   NOTE:
   Do not reuse the bushing after its tabs are pulled up.
3. Press and pull off the shaft.

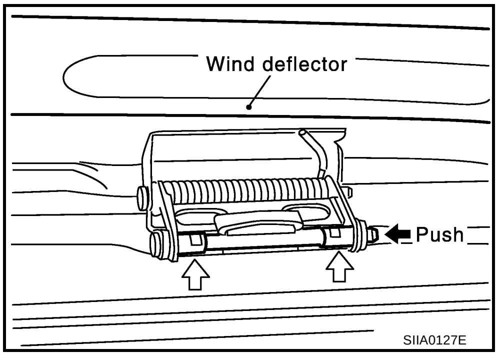

Installation

Install in the reverse order of removal.

SUNROOF MOTOR

Removal

1. Remove headlining. Refer toEI-40, "HEADLINING" .
2. Remove motor mounting screws and mounting nuts.
3. Remove the harness connector from sunroof motor, then remove the sunroof motor.

NOTE:

- Remove the sunroof motor when the sunroof is in the fully-closed position.
- Do not rotate the removed sunroof motor as a single unit.

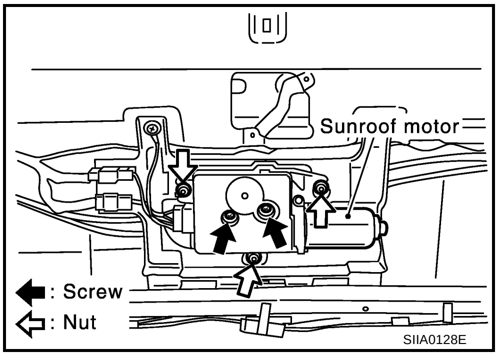

Installation

Install in the reverse order of removal.

NOTE:

- Move sunroof motor laterally little by little until the gear is completely engaged onto the wire on sunroof unit and the mounting surface becomes parallel. Then secure sunroof motor with screws and nuts.
- Before installing sunroof motor, be sure to place the link and wire assembly in the symmetrical and fully closed position.